We are DEVELON

Since 1937, DEVELON has led continuous innovation,
driving the transformation of construction equipment as South Korea's leading brand.
We are the pioneers of innovation, shaping a better future.

Powered by **Innovation**

HD CONSTRUCTION EQUIPMENT

https://global.develon-ce.com

©HD Construction Equipment. All rights reserved.
2026.10

Certain specifications may differ from actual results based on engineering calculations. Specifications are for comparison purposes only and are subject to change without notice. The specifications of individual DEVELON equipment may vary due to normal changes in design, manufacturing, operational conditions, and other factors. Some images of DEVELON equipment may show non-standard configurations.

DEVELON

Excavator

DX400LC-7M

UP TO ANY TASK AND SITE WITH FULL POWER

DX400LC-7M

A Vanguard in a Tough Job Site

DEVELON is here with our exceptional products, and new ideas to let your Business never be defeated.

A CONQUEROR SHOWING ULTIMATE PERFORMANCE

DX400LC-7M guarantees the best productivity at all job sites. Powered by a reliable Scania engine, electronical engine which delivers superior power. Superior workload along with optimum fuel efficiency. Increased digging power, lifting capacities and traction force were combined for overwhelming performance.

A STRATEGIST FOR LONG-TERM EFFICIENCY

DX400LC-7M brings smart and innovative solutions which serve to increase long term profit. A standard auto-idle feature and relief cutoff, optionally available SPC system automatically controls engine RPM and hydraulic system to serve best fuel efficiency.

A RELIABLE VETERAN ARMED WITH DURABLE STRUCTURE

Heavy duty X- shaped undercarriage with integrated track spring and idler. Flexible and robust in operation, X-shaped chassis frame designed using reliable element and formed in optimal structural integrity. Reinforced undercarriage with newly designed track idler, rollers and track guards. Ensuring long life and high uptime even in extreme job sites.

Overall veteran for all types of construction site and any type of construction tasks

The vastness of field attracts it, heavy quarry and hard mine will be anticipated. DX400LC-7M is committed to functionality to help you push harder. It is fully under arm with ultimate power, tenacity, and the passion to find a way.

A confident vanguard. DX400LC- 7M is the first one to push the limits. Choreographed for all construction site, it delivers an extensive line of performance. DX400LC-7M is fully armed with fortified undercarriage and assertive front styling. With VBO and Smart Power control system, it is efficiently and optimally prepared for any specific job. Exuberant engine power, timeless quality, long term durability result in unrivaled performance at the point of extreme need.

Take over your goal. A flexible combatant DX400LC-7M will let you win in every construction site. Develon's Pioneering spirit and passion root runs for everything it does. Your DX400LC-7M is expecting you, holding for next combat.

WE ARE BACK WITH NEW FEATURES

All The Nice Features of The Previous Model Bodily Succeeded, Even Nicer Things to Come.

HEAVY DUTY UNDERCARRIAGE
Heavy duty X- shaped undercarriage with integrated track spring and idler. Offered with durable box section track frame. The sprocket structure and tooth have been strengthened to prevent debris and increase durability.

ADDITIONAL LED WORKING LAMP (OPTIONAL)
New additional working lamp contributes to enhanced safety. Optionally available LED lamp enhances visibility through improved illumination.

SIDE AND REAR VIEW CAMERA
Optional side and rear-view camera keep watch in ways beyond operator's sight. Additional LED lighting system attached on each side for the clear identification.

INCREASED CONTROLLABILITY
Joystick and switches integrated in control stand for precise operation. All switches grouped together and ergonomically positioned to the right.

OIL WASHED PRE-CLEANER (OPTIONAL)
Oil washed-type pre-cleaner provides better filtering in dusty environments. Increase maintenance interval resulting in more uptime.

MY DEVELON (OPTIONAL)
Offering 'preventive maintenance service' based on machine operating data. Providing an expert level consultation to dealers. Functioning as fleet management tool for the customers.

ETP (ELECTRIC TRANSFER PUMP) (OPTIONAL)
Use this switch to easily refill fuel for your machine after its inspection or repair.

HEATING AND COOLING SEAT (OPTIONAL)
The optional, air- suspended, climatized driver's suspension seat provides pleasant seating conditions and a high level of comfort.

NEW 8-INCH TOUCH MONITOR
- Bigger LCD monitor with user-friendly touch screen panel.
- Allowing easy access to machine settings and maintenance data.

AVM (AROUND VIEW MONITOR) (OPTIONAL)
- Around view monitor enables panoramic view which increases operational efficiency.
- It prevents the safety accidents caused by blind spots.

ADVANCED FILTRATION
Highest efficiency filters remove water, dust & particles to protect your investment optimally.

STRENGTHENED BOOM AND ARM
Reinforced castings and forged steel pivot points. Reinforced heavy-duty arm and boom with new optional boom floating system. To better protect the base of the arm, reinforced bars have been added and the arm center and end boss have been strengthened.

*Option spec info is included to the images contained in this material and may not be the same with the actual specs.

EFFICIENT PERFORMANCE IN RIGHT PLACE

Dominative Performer With Intelligence and Tireless Power

Accelerate your productivity with DX400LC–7M. Being supremely capable in demanding situations, it is ideally prepared for any tough tasks. Featured with enhanced hydraulic system and exuberant engine power, DX400LC-7M provides incomparably superior productivity. Powered by a Scania engine, it shows excellent force and torque characteristics, while improved hydraulic system uses the engine power more effectively.

A winning team of brain and brawn. DX400LC-7M takes even the heaviest work with efficient, and smart performance to save your time and money. VBO system which is Develon's own hydraulic system based on Develon electronic controlled pump, 'virtually' generates the hydraulic flow through the electronic sensor to effectively prevent fuel loss and internal abrasion. SPC system automatically controls engine RPM to supply proper torque depending on workload to serve best fuel consumption. its highly efficient performance offers specific configuration to always mold into every construction requirement and every sector.

Superior and Sustainable Power

The DX400LC-7M is powered by economic and powerful Scania DC09 engine. Advanced DC09 engine delivers a superior performance while still meeting the Stage V emissions regulations. With excellent fuel efficiency, reliability and long service life, it combines exceptional power output and high torque at low revs. High-pressure fuel injection and precise timing provide optimized fuel consumption. Highly effective exhaust after-treatment system also contributes to reduce emissions without interrupting productivity.

VBO (VIRTUAL BLEED OFF) SYSTEM

VBO system is Develon's own hydraulic system based on 'Develon electronic controlled pump'
Generally, most excavators use hydraulic system, transferring the energy by using hydraulic flow. In order to facilitate the rapid response to the joystick signal, this hydraulic flow is continuously generated from the pump even when the excavator is not in operation. The weakness of this system is the fuel loss. On the contrary, VBO system 'virtually' generates the hydraulic flow through the electronic sensor. Due to its means, customer can be benefited from VBO system in every way. Not to mention the fuel efficiency and the safe sustenance of the system, but also immediate response and familiar controllability, the strength of existing hydraulic system.

Swing Drive

Swing drive minimizes shock during rotation while making increased torque available to ensure rapid cycles.

EPOS™ (Electronic Power Optimizing System)

The smart EPOS™ system provides a perfectly synchronized communication link between the engine's electronic control unit and the hydraulic system. A CAN (Controller Area Network) system enables a constant flow of information between the engine and hydraulic system, to ensure power is delivered exactly as needed.

SPC (Smart Power control) System

Newly developed, SPC is a predictive powertrain control system, which automatically identifies working mode and adjusts engine RPM to supply proper pump torque. To reduce the unnecessary waste of fuel consumption, it analyzes and manages gear steps and the set the speed. Raising the pump torque up to maximize when power is needed and lowering the pump torque to reduce unnecessary fuel consumption.

BEING AT HOME, ON THE FIRST RIDE

The Ideal Condition For More Operator Satisfaction

DX400LC-7M helps you make your job easier. With its spaciousness, user-friendliness and flexibility, it is designed to provide you with the best possible working conditions. The intuitive high-definition display puts everything you need to know. Integrated switches and an intuitive joystick for optimum controllability and comfort.

You have easy access to storage compartments and a clear all-round view of the worksite. Its spacious interior offers a fully adjustable, heated air suspension seat. Safety features also assures operator's safety by establishing protective and adaptive working environment. Your haven keeps you revitalized to work for hours without feeling tired.

SPACIOUS CABIN COMFORT

Refined interior with enhanced legroom and extendable storage space guarantees a serene ride to you. A more orderly interior equipped with high-class designed upholstery and thoroughly changed comfort accessories. This ensures operator to have a clear and uncluttered workplace at all times.

HEATING AND COOLING SEAT (OPTIONAL)

The optional, air- suspended, climatized driver's suspension seat provides pleasant seating conditions and a high level of comfort. Equipped with the integral armrests and temperature control device. Heating and cooling temperature range segmented in three stage to meet various customer needs.

SMALL DETAILS ADD THE FEELING OF REFINEMENT

Heating and ventilation, Air conditioning system upgraded for pleasant environment. USB charger also equipped for additional comfort. Rear sun visor is also equipped for UV protection.

AVM (AROUND VIEW MONITOR) (OPTIONAL)

The images can be viewed on a monitor in the interior of the cab. The operator can directly view the area around equipment, when changing implements. Also can have a perfect view of the front structure.

ADDITIONAL WORKING LED LAMP (OPTIONAL)

New additional working LED lamp contributes to enhanced safety through improved illumination.

SIMPLE OPERATION

Precise control of the equipment increases versatility, safety and facilitates tricky operations requiring great precision. Leveling operations and the movement of lifted load made easier and safer. Joystick and switches integrated in control stand for precise operation.

A COMPLETE SUM, IMPERVIOUSNESS TO EXTERNAL FORCE

Compact and Reliable, From Concept to Operation Timeless Quality With the Fine Regard to the Detail

Don't let the uncertainty cut in. DX400LC-7M is designed to protect, whilst being comfortable and reliable and lasts for many years. Computer assisted design technique applied to remote possibilities in hydraulic system and frame structures. Undercover mounting fortified and track idler bracket reinforced.

Develon's products are always built to the strictest quality with the regard to the finest details. To virtual, simulated tests to comprehensive, practical tests – every component has to prove its suitability for operation by undergoing strenuous tests. All the way from our designs and the materials we choose to the solutions that we offer ensure you can keep on going.

STRENGTHENED BOOM & ARM

Finite element analysis has been used to calculate the best load distribution throughout the boom structure. Combined with thicker material both reliability and component life are increased. To better protect the base of the arm, reinforced bars have been added and the arm center and end both have been strengthened.

ADVANCED PIN BUSH AND DISC (EM BUSHING)

Pocket and dimple surface pattern optimized for greasing and filtering out the impurities. Wear resistant lubricant is coated for noise free enhancement in noise cancellation and anti seizure property. Used polymer shim with hard metal disk for 90% less abrasion and hard metal anti wear disk for 75% less abrasion.

X- CHASSIS UNDERCARRIAGE

X- chassis undercarriage enables increased ground clearance and improved maneuvering ability. Sloped surface design optimized to shed debris and maximize uptime.

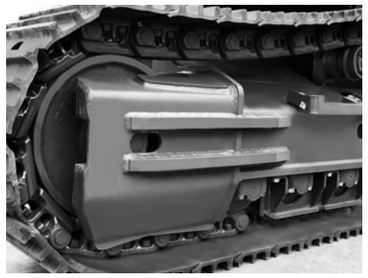

IDLER BRACKET IMPROVEMENT

Idler bracket has been fitted with reinforced bar. Thick and wider strip idler applied to add strength and avoid bending distortion. Protect the main components from external impacts.

HEAVY-DUTY SPROCKET

The sprocket design and entire tooth profile is optimized for long-lasting service. Steel sprockets guarantee the highest resistance and durability even in the most severe applications. The sprocket tooth shape has been redesigned to prevent popping and increase component life.

MAINTENANCE MASTERED IN FIVE MINUTES

Easy Maintenance With Uptime Front of Mind

Learning to manage your equipment should be quick and straight forward. Short maintenance operations and extended maintenance intervals increase uptime and reduce costs. DX400LC-7M is made to be readily available on site when it's needed.

To ensure the machine uptime, cleaning maintenance and repairs must be simple to carry out. Centralized grease inlets are designed for simple routine maintenance. Extensive service network and expert assistance are also readily available, MY DEVELON provides you the operational machine data in an hourly cycle and broad range of service to get the most productivity out of your equipment.

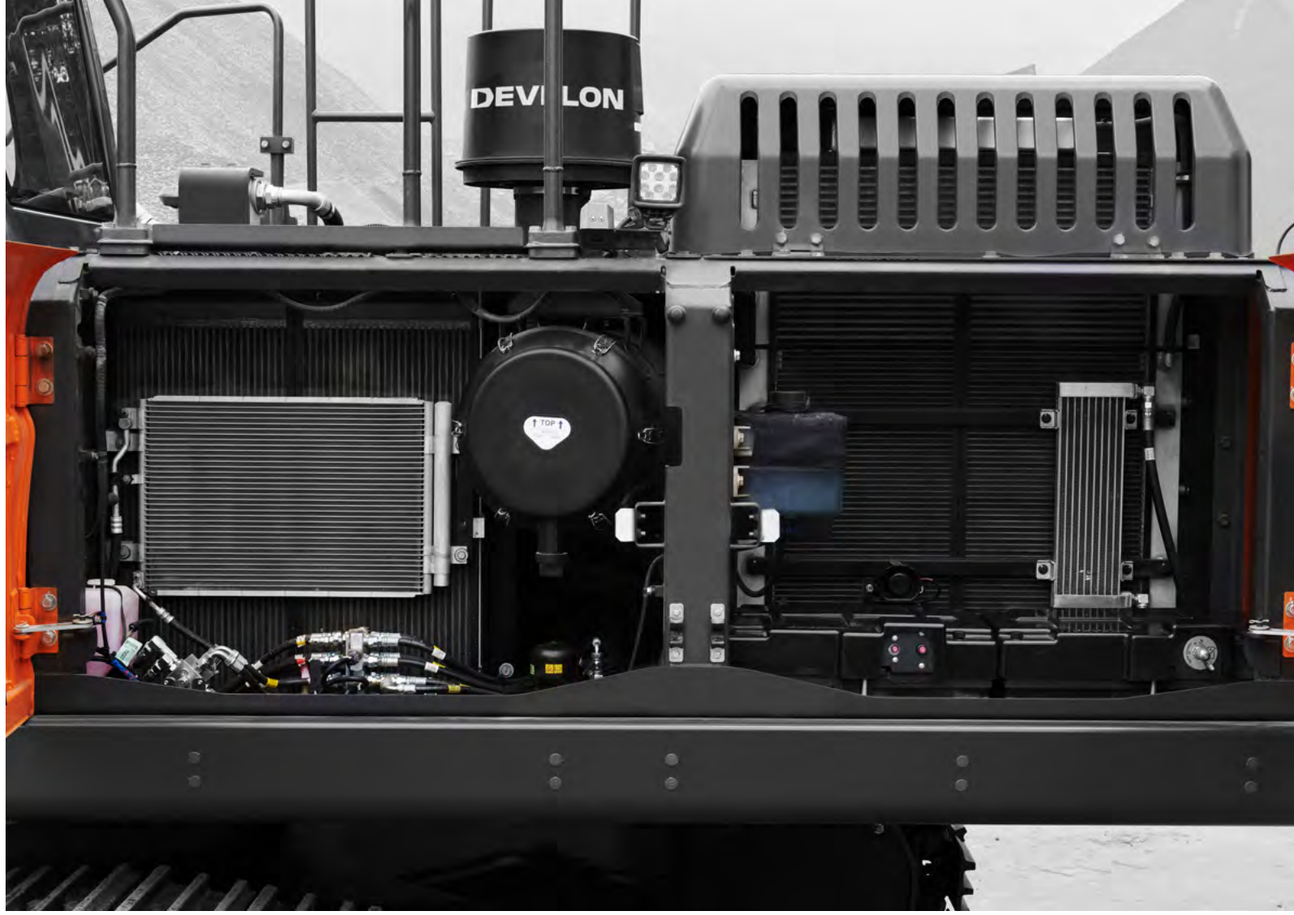

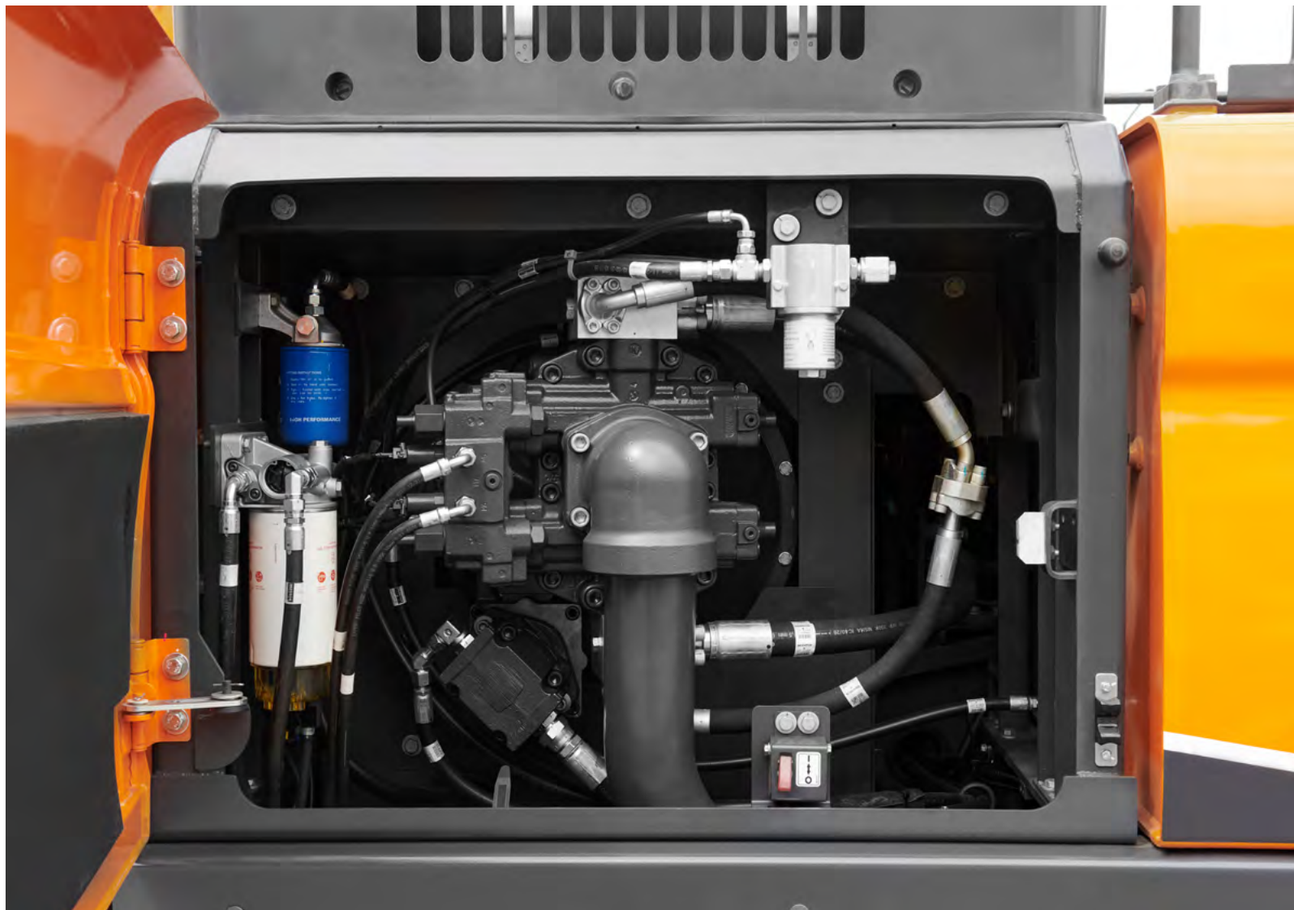

1. CONVENIENT FUSE BOX

The fuse box is located in the storage compartment behind the seat, providing an organized environment and convenient access.

2. AIR CLEANER

Air cleaner of large capacity removes 99% of airborne particles, reducing the risk of engine contamination.

3. WATER SEPARATOR

Highly efficient water separator in fuel to prevent engine damage by removing moisture. Reducing the risk of external engine contamination and lengthen the engine's lifespan.

4. PRE-CLEANER

Rotor type dry pre-cleaner attached as a standard option.

5. CENTRALIZED GREASE INLETS FOR EASY MAINTENANCE

The boom & arm grease inlets are grouped for easy access. Remote grease points make it easier to lubricate hard-to-reach pins on the lift arm and articulation system.

6. ETP (ELECTRIC TRANSFER PUMP) (OPTIONAL)

Use this switch to easily refill fuel for your machine after its inspection or repair.

MY DEVELON

Telematics Service (OPTIONAL)

TELECOMMUNICATIONS Data flow from machine to web

TELEMATICS TERMINAL

The terminal device is installed and connected to a machine to get machine data.

TELECOMMUNICATION

DEVELON provides Dual mode (Cellular, Satellite) communication to maximize communication coverage

MY DEVELON

Users can monitor the machine status from DEVELON Website & Mobile App

TELEMATICS SERVICE BENEFITS DEVELON and dealer support customers to improve work efficiency with timely and responsive services

CUSTOMER

Improve work efficiency

- Timely and preventive service
- Improve operator's skills by comparing work pattern
- Manage fleet more effectively

DEALER

Better service for customers

- Provide better quality of service
- Maintain machine value
- Better understanding of market needs

DEVELON

Responsive to customer's voice

- Utilize quality-related field data
- Apply customer's usage profile to develop new machine

MAIN FUNCTIONS (WEB/APP) DEVELON Telematics Service provides various functions to support your great performance

OPERATION

You can easily access and manage equipment information and maintenance costs on the platform anytime, anywhere. Retrieve details such as location, uptime, utilization, and fuel costs based on field data, enabling efficient work planning by considering the progress at the job site.

HEALTH

Based on reliable manufacturer information, you can have checklists for each usage cycle and receive replacement cycle reminders for consumable parts. In the event of equipment defects, you will receive notifications and can request service immediately. This ensures swift service support from certified DEVELON dealers and minimizes machine idle time.

E-COMMERCE

You can purchase a variety of digital products and certified genuine parts for your equipment online. Elevate your experience by subscribing to our exclusive digital services.

LIBRARY

Saving your time to find all the documents about your equipment. We provide monthly operation reports, manuals, parts books and more. This helps you to access to a wide range of information and knowledge of your equipment.

* This service can be accessed in certain countries, and the scope of service may differ depending on your country and region.

GLOBAL PARTS NETWORK

QUALITY-PROVEN MAIN COMPONENTS

DEVELON provides fast and precise worldwide delivery of genuine DEVELON parts through its global PDC (parts distribution center) network.

GLOBAL NETWORK

The global network of the GPDC (Global Parts Distribution Center) maximizes its fill rate by making sure that each center is stockpiled with all the critical parts required for businesses in its area. The network also minimizes the time and costs required for parts delivery by positioning PDCs close to major markets around the world. DEVELON PDCs communicate with customers in their time zone, informing them that they are open for operation, and deliver parts to them as early as possible.

THE GLOBAL PARTS DISTRIBUTION CENTER NETWORK

PDCs had been set up as shown below, including Mother PDC in Ansan, Korea. The ten other PDCs include one in China (Yantai), three in USA (Atlanta, Seattle and Miami), two in Europe (Belgium and the UK), one in the Middle East (Dubai), one in Asia (Indonesia) and one in Brazil (São Paulo).

PDC BENEFIT

- Distribution Cost Reduction
- Maximum Parts Fill Rate
- Shortest Distance/ Time Parts Delivery
- Real-time Service Support
- Minimum Downtime

TECHNICAL SPECIFICATION

ENGINE

Model

SCANIA DC09 076A
2 valves per cylinder, vertical injectors, water cooled, turbo charged with air to air intercooler. The emission levels are well below the values required for phase III.

Number of cylinders

5

Rated Horse Power

232 KW (311 HP) @ 2,100 rpm (SAE J1995, gross)
228.4 KW (306.3 HP) @ 1,800 rpm (SAE J1349, net)

Max torque

1,407 N.m @ 1,575 rpm

Piston displacement

9,300 cc (568 cu.in)

Bore & stroke

130 mm x 140 mm (5.1" x 5.5")

Starter

24 V / 6 kW

Batteries

2 X 12 V / 200 Ah

Air cleaner

Double element with auto dust evacuation.

HYDRAULIC CYLINDERS

The piston rods and cylinder bodies are made of high-strength steel. A shock absorbing mechanism is fitted in all cylinders to ensure shockfree operation and extend piston life.

Cylinders	Quantity	Bore x Rod diameter x stroke
Boom	2	160 x 105 x 1,450 mm
Arm	1	170 x 120 x 1,805 mm
Bucket	1	150 x 100 x 1,300 mm

HYDRAULIC SYSTEM

The heart of the system is the EPOS™ (Electronic Power Optimizing System). It allows the efficiency of the system to be optimized for all working conditions and minimizes fuel consumption.

- The hydraulic system enables independent or combined operations.
- Two travel speeds offer either increased torque or high speed tracking.
- Cross-sensing pump system for fuel savings.
- Auto deceleration system.
- Two operating modes, two power modes.
- Button control of flow in auxiliary equipment circuits.
- Computer-aided pump power control.

Main pumps

2 variable displacement axial piston pumps
Max flow: 2 x 350 l/min

Pilot pump

Gear pump - max flow: 24.12 l/min

Maximum system pressure

Front :
Normal mode : 350 kgf/cm^2
Power mode : 370 kgf/cm^2
Travel : 350 kgf/cm^2
Swing : 300 kgf/cm^2

SWING MECHANISM

- An axial piston motor with two-stage planetary reduction gear is used for the swing.
- Increased swing torque reduces swing time.
- Internal induction-hardened gear.
- Internal gear and pinion immersed in lubricant bath.
- The swing brake for parking is activated by spring and released hydraulically.

Swing speed : 0 to 9.3 rpm

WEIGHT

6,500 mm(21'5") HD Boom, 3,200 mm (10'6") HD Arm, 2.03 m^3 (2.65 yd^3) H Class Bucket

Shoe Type	Shoe width (mm)	Operating weight (kg)	Ground pressure (kgf/cm^2)
TG	600 (2')	40,600 (93,035 lb)	0.74
DG	600 (2')	40,600 (93,256 lb)	0.74
TG	750 (2'5")	41,300 (94,799 lb)	0.60
TG	800 (2'6")	41,500 (95,240 lb)	0.57
TG	900 (3')	42,000 (96,342 lb)	0.52

UNDERCARRIAGE

Chassis are of very robust construction, all welded structures are designed to limit stresses. High-quality material used for durability. Lateral chassis welded and rigidly attached to the undercarriage. Track rollers lubricated for life, idlers and sprockets fitted with floating seals.

Tracks shoes made of induction-hardened alloy with double grouser. Heat-treated connecting pins. Hydraulic track adjuster with shock-absorbing tension mechanism.

Number of rollers and track shoes per side

Upper rollers : 2 (standard shoes)
Lower rollers: 9
Shoes : 50
Total length of track : 5,203 mm (17' 1")

DRIVE

Each track is driven by an independent axial piston motor through a planetary reduction gearbox.
Two levers with control pedals guarantee smooth travel with counterrotation on demand.

Travel speed (fast/slow)

3.0 / 5.4 km/h (1.9 / 3.4 mph)

Maximum traction force

19,300 / 35,200 kgf (42,549 / 77,603 lbf)

Maximum grade

30 (57.7 %)

ENVIRONMENT

Noise levels comply with environmental regulations (dynamic values).

Sound level guarantee

106 DB (A) (2000/14/EC)

Cab sound level

74 DB (A) (ISO 6396)

REFILL CAPACITIES

Fuel tank

600 L (158.5 US gal)

Cooling system (Radiator capacity)

52.4 L (13.84 US gal)

Engine oil

36 L (9.5 US gal)

Swing drive

8 L (2.1 US gal)

Final drive
(each =Travel Device = travel motor + travel reduction gear)

2 X 7 L (2 X 1.85 US gal)

Hydraulic tank

380 L (100.4 US gal)

BUCKET

Bucket Type	Capacity (m^3)	Width (mm)		Weight (kg)	6.5 MONO Boom		
	SAE	W/Cutter	W/O Cutter		2.6 Arm	3.2 Arm	3.95 Arm
GP	1.25	1,278	1,228	1,249	A	A	B
	* 1.37	-	1,431	1,465	A	B	C
	1.61	1,550	1,500	1,392	B	C	D
	1.83	1,718	1,668	1,522	C	D	-
H Class	1.44	1,272	1,238	1,389	A	B	C
	1.66	1,428	1,394	1,489	A	B	C
	1.81	1,534	1,500	1,588	B	C	D
	2.03	1,684	1,650	1,684	C	D	-
	2.32	1,892	1,858	1,817	D	D	-
S Class	1.56	-	1,352	1,893	D	-	-
	1.71	-	1,452	1,973	C	D	-
	1.92	-	1,602	2,094	C	D	-
	2.22	-	1,809	2,309	D	-	-

* : Rock Bucket
Based on ISO 10567 and SAE J296, arm length without quick change clamp
A : Suitable for materials with density of 2,100 kg/m^3 (3,500 lb/yd) or less
B : Suitable for materials with density of 1,800 kg/m^3 (3,000 lb/yd) or less
C : Suitable for materials with density of 1,500 kg/m^3 (2,500 lb/yd) or less
D : Suitable for materials with density of 1,200 kg/m^3 (2,000 lb/yd) or less
X : Not recommended

DIMENSIONS

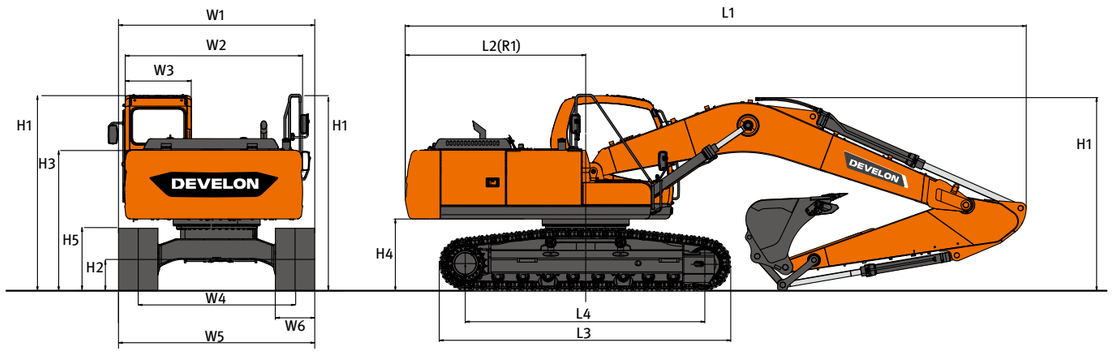

DIMENSIONS

Model				DX400LC-7M		
Dimension				STD	OPT1	OPT2
Boom				mm	6,500	6,500	6,500
Arm				mm	3,200	2,600	3,950
Bucket (PCSA)				m^3	2.03 R2H	2.32 R2H	1.66 R2H
Undercarriage (Track+Grouser)				mm	LC 600 TG	LC 600 TG	LC 600 TG
Overall	L1	Overall Length		mm	11,285	11,400	11,310
	H1	Overall Height	Boom	mm	3,280	3,510	3,375
			Hose	mm	3,415	3,665	3,535
			Cabin	mm	3,210	3,210	3,210
	W1	Overall Width		mm	3,406	3,406	3,406
	L2 (R1)	Rear Swing Radius		mm	3,530	3,530	3,530
	H2	Ground Clearance*		mm	*600	*600	*600
Swing Body	W2	House Width	Frame only	mm	2,990	2,990	2,990
			w/Catwalk	mm	3,280	3,280	3,280
			w/Protector	mm	3,103	3,103	3,103
	W3	Cabin Width		mm	1,010	1,010	1,010
	H3	Height Over Cover		mm	2,360	2,360	2,360
	H4	Counterweight Clearance*		mm	*1,270	*1,270	*1,270
Undercarriage	H5	Track Height*		mm	*1,070	*1,070	*1,070
	L3	Track Length		mm	5,203	5,203	5,203
	L4	Tumbler Distance		mm	4,250	4,250	4,250
	W4	Track Gauge		mm	2,750	2,750	2,750
	W5	Undercarriage Width	STD	mm	3,350	3,350	3,350
	W6	Shoe Width		mm	600	600	600
	-	Grouser Height		mm	36	36	36
Cab	-	Cabin Height (H1'-H3)		mm	853	853	853

*Grouser 미포함

WORKING RANGES

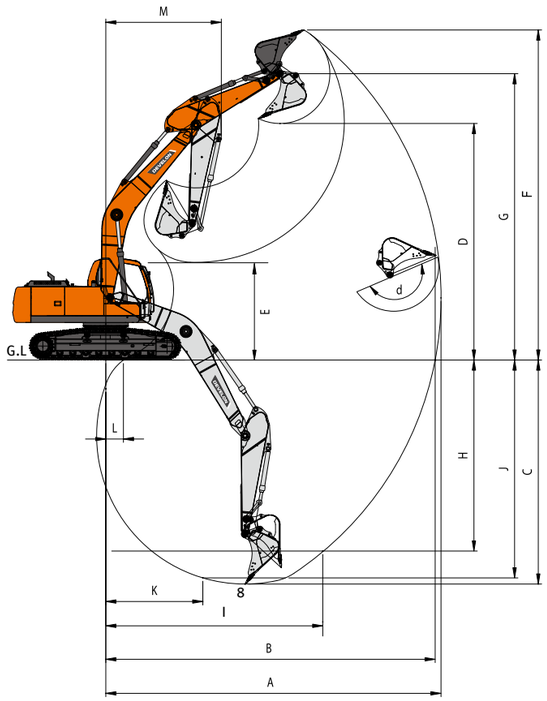

WORKING RANGE

BOOM LENGTH		mm	6,500		
ARM TYPE		mm	2,600	3,200	3,950
BUCKET TYPE (SAE / PCSA)		m^3	2.32 H	1.03 H	1.66 H
A	MAX. DIGGING REACH	mm	10,540	11,120	11,930
B	MAX. DIGGING REACH (GROUND)	mm	10,325	10,920	11,740
C	MAX. DIGGING DEPTH	mm	6,885	7,485	8,290
D	MAX. DUMPING HEIGHT	mm	8,605	7,220	7,635
E	MIN. DUMPING HEIGHT	mm	3,380	2,755	2,000
F	MAX. DIGGING HEIGHT	mm	9,910	10,215	10,815
G	MAX. BUCKET PIN HEIGHT	mm	8,605	8,875	9,335
H	MAX. VERTICAL WALL DEPTH	mm	3,715	4,020	6,830
I	MAX. RADIUS VERTICAL	mm	8,760	9,265	9,885
J	MAX. DIGGING DEPTH(8'LEVEL)	mm	6,650	7,295	8,155
K	MIN. RADIUS 8' LINE	mm	3,260	3,310	3,380
L	MIN. DIGGING REACH	mm	2,245	795	-290
M	MIN. SWING RADIUS	mm	4,445	4,455	4,515
d.	BUCKET ANGLE (DEG)	°	178.4	178.4	178.4

STANDARD & OPTION

STANDARD EQUIPMENT

Boom & Arm

· 6.5 m Boom (Heavy duty)
· 3.2 m Arm (Heavy duty)

Hydraulic system

· Boom and arm flow regeneration
· Boom and arm holding valves(MCV)
· Swing anti-rebound valves
· Spare ports (Control valve)
· One-touch power boost

Cabin & Interior

· All weather sound suppressed type cab
· Air conditioner & Heater
· Adjustable suspension seat with head rest and adjustable arm rest
· Pull-up type front window and removable lower front window
· Room light
· Intermittent windshield wiper
· Cup holder
· Hot & Cool box
· LCD color monitor panel
· E/G RPM control dial
· AM/FM radio + MP3 (USB)
· Remote radio ON/OFF switch
· 12V,24V power socket
· Serial communication port for laptop PC interface
· Joystick lever with 3 switches

Safety

· Large handrails and step
· Convex metal anti-slip plates
· Seat belt
· Hydraulic safety lock lever
· Safety glass
· Hammer for emergency escape
· Right and left rearview mirrors
· Travel alarm

Others

· Double element air cleaner
· Additional water separator
· Dry type pre cleaner
· Fuel filter
· Dust screen for radiator/oil cooler
· Engine overheat prevention system
· Engine restart prevention system
· Self-diagnostic system
· 60A Alternator (24V, 50 amps)
· Electric horn
· Halogen working lights (frame mounted 1, boom mounted 2)
· Hydraulic track adjuster
· Track guards
· Greased and sealed track link
· Hydraulic oil tank air breather filter
· Long & Fixed track
· Counterweight (7.4 Ton)

OPTIONAL EQUIPMENT

Some of optional equipments may be standard in some markets. Some of this optional equipment is not available in some markets. You must check with the local Develon dealer to know about the availability or to release the adaptation following the needs of the applications.

Boom & Arm

· 6.5 m Boom
· 2.6 m Arm
· 3.2 m Arm
· 3.95 m Arm

Safety

· Boom and arm hose rupture protection valve
· Overload warning device
· Cabin Front Upper/Lower Guard (ISO 10262, FOGS standard)
· Travel & swing alarm
· Rotating beacon
· Rear lamp
· LED lights
· Side & Rear view camera

Cabin & Interior

· Air suspension seat
· Rain Shield
· High seat Mount
· Breaker pedal
· ROPS/FOGS Cabin
· Cabin front guard (Upper and lower guard)
· Steel roof cover
· Additional mirror
· DAB Audio
· LED working lamp

Others

· Piping option
  - Piping for Crusher
  - Piping for Breaker
  - Piping for Quick clamp
· SHOE (mm) 600 TG / 750 TG / 800 TG / 900 TG / 600 DG
· Lower wiper
· 60A/80A alternator
· Fuel filler pump
· Working Lights
  - 4-front / 2-rear on cabin
  - 2-front on cabin
  - 1 ton counterweight
· Hydraulic Oil
  - Cold weather (VG32)
  - Normal (VG46)
  - Tropical weather (VG68)
· Breaker filter
· Water separator with heater
· Heavy duty under cover

DEVELON

DEVELON
Powered by **Innovation**

MEMO

DEVELOPING + ONWARDS

Continuous evolution, for better

DEVELON represents a commitment to innovation that drives meaningful change.
Not settling for the present, We continuously develop advanced products and solutions,
moving forward to shape the future of construction.